DATE DEC. 13, 2010	OUTLINE DIMENSIONS	MOTOR TYPE: AEHH8P
CAT. #: NP0304	3-PHASE INDUCTION MOTOR	FRAME NO. 286T

Pole	HP	kW	Hz	VOLT	Syn.Speed r/min(rpm)
4	30	22.4	50	190/380	1500

Ins	Rating	Dimension in	Approx Weight	Bearings
F	CONT.	inch	454 lbs.	DE: 6311ZZ NDE: 6310ZZ

Totally Enclosed Fan Cooled Type. Squirrel-cage Rotor.

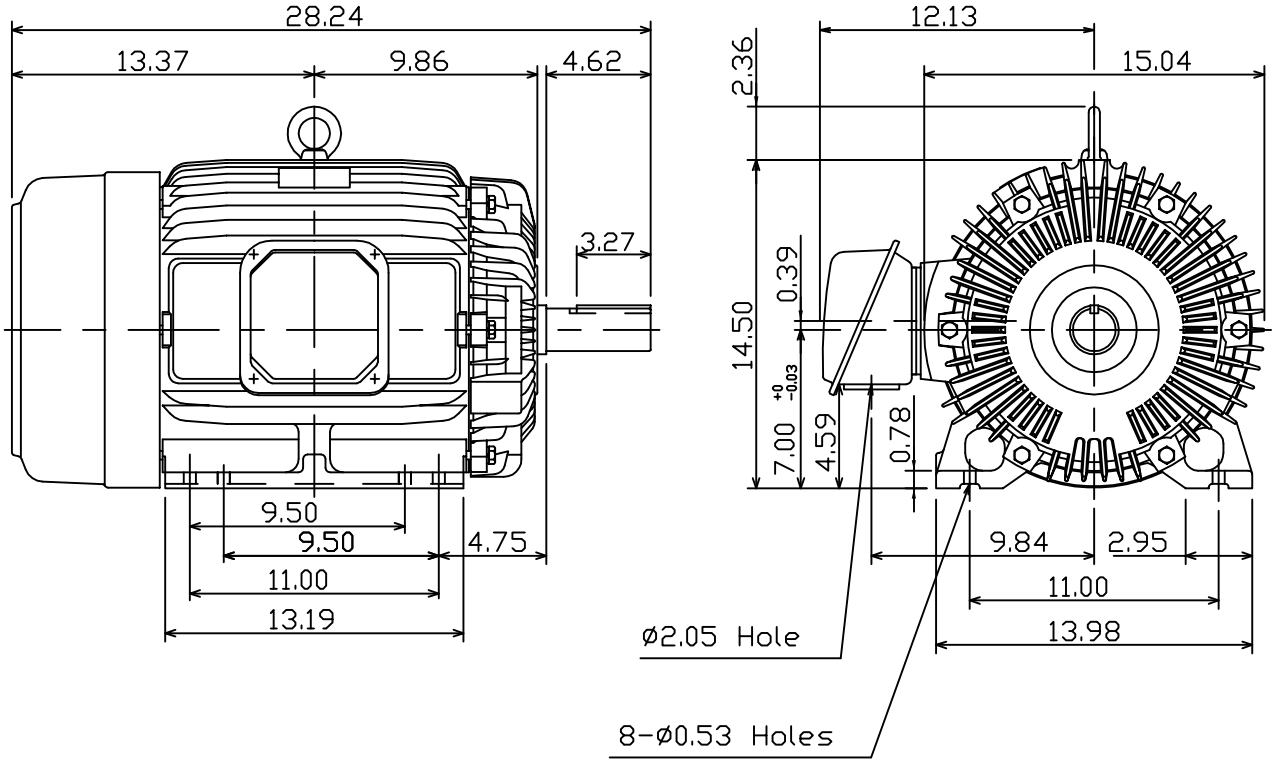

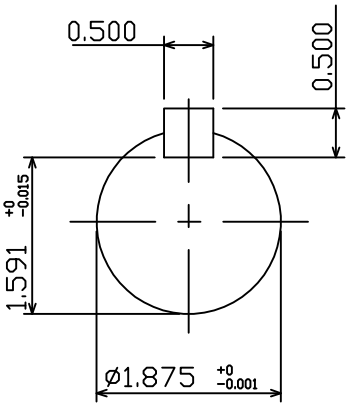

0				

DWN.	K.L.KUO	12 06 10	TECO Westinghouse	DWG NO.
CHKD.	K.L.KUO	12 07 10		31049J353300
APPD.	M.C.TSAI	12 07 10		