DATE DEC. 13, 2010	OUTLINE DIMENSIONS	MOTOR TYPE: AEHH8P
CAT. #: NP0202	3-PHASE INDUCTION MOTOR	FRAME NO. 256T

Pole	HP	kW	Hz	VOLT	Syn.Speed r/min(rpm)
2	20	14.9	50	190/380	3000

Ins	Rating	Dimension in	Approx Weight	Bearings
F	CONT.	inch	311 lbs.	DE: 6309ZZ NDE: 6307ZZ

Totally Enclosed Fan Cooled Squirrel Cage Rotor.

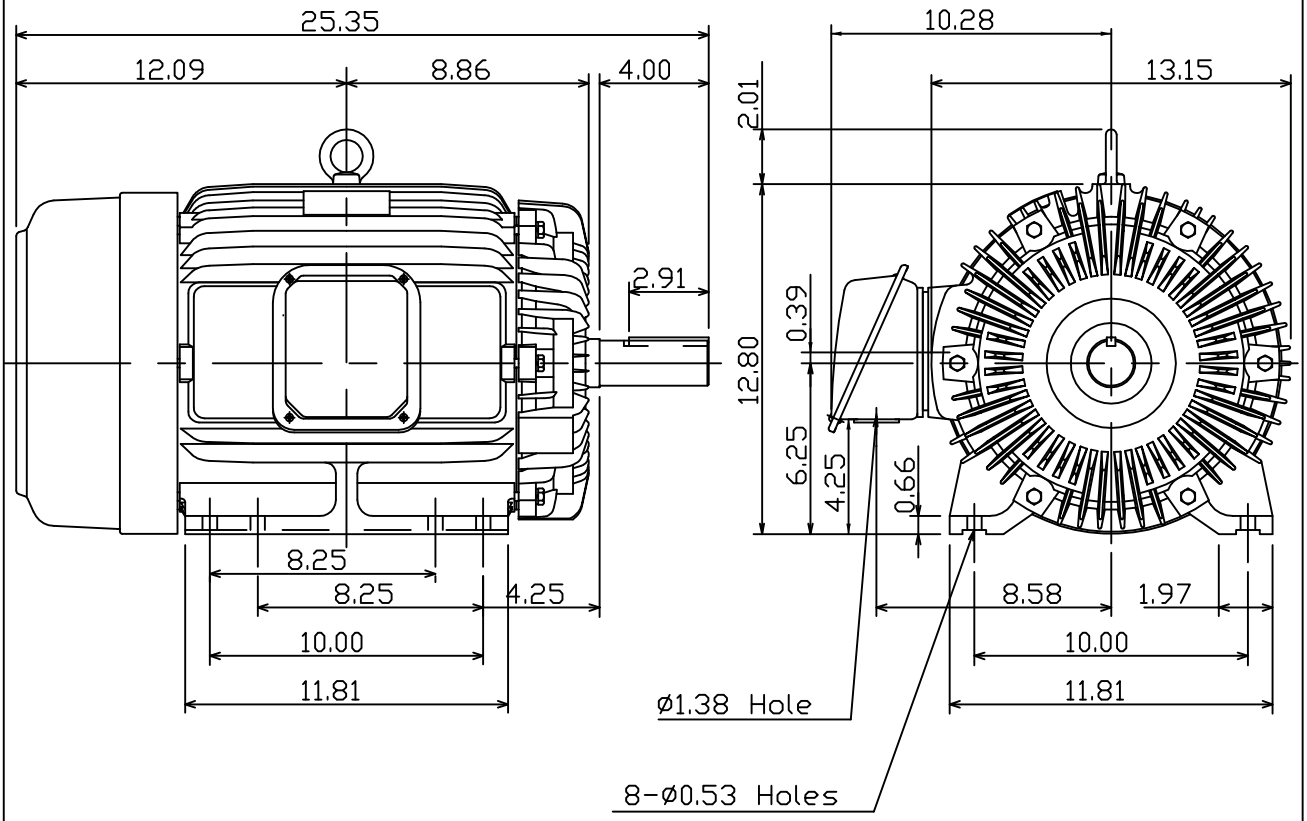

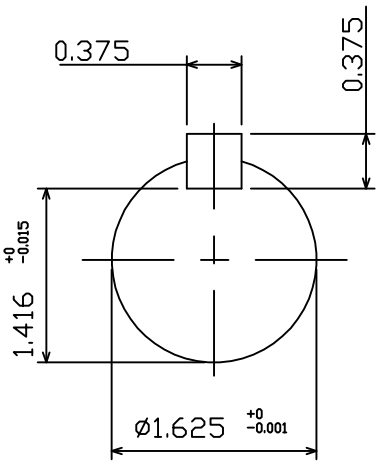

DWN.	K.L.KUO	12 07 10	TECO Westinghouse	DWG NO.
CHKD.	K.L.KUO	12 07 10		31049J349210
APPD.	M.C.TSAI	12 07 10		