DATE NOV. 23, 2010	OUTLINE DIMENSIONS	MOTOR TYPE: AEHH8P
CAT. #: NP0102	3-PHASE INDUCTION MOTOR	FRAME NO. 215T

Pole	HP	kW	Hz	VOLT	Syn.Speed r/min(rpm)
2	10	7.5	50	190/380	3000

Ins	Rating	Dimension in	Approx Weight	Bearings
F	CONT.	inch	176 lbs.	DE: 6308ZZ NDE: 6306ZZ

Totally Enclosed Fan-Cooled Type, Squirrel-Cage Rotor.

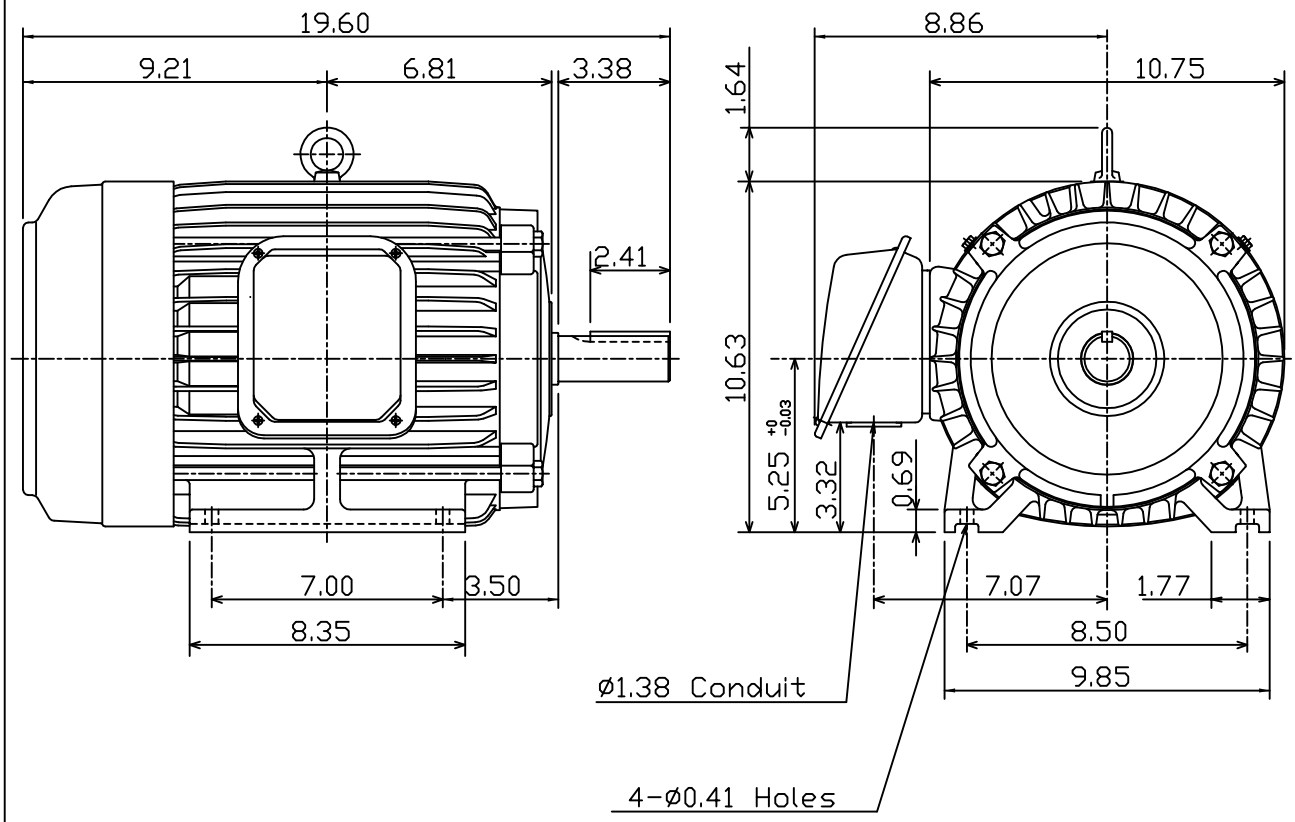

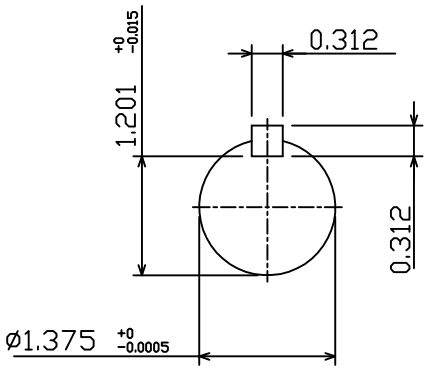

0				

DWN.	J.H.LIANG	05·20·99	TECO Westinghouse	DWG NO. 31049D192410
CHKD.	C.S.LO	05·26·99		
APPD.	Y.B.HUANG	05·26·99		