DATE NOV. 23, 2010	OUTLINE DIMENSIONS 3-PHASE INDUCTION MOTOR	MOTOR TYPE: AEHH8P
CAT. #: NP0052		FRAME NO. 184T

Pole	HP	kW	Hz	VOLT	Syn.Speed r/min(rpm)
2	5	3.73	50	190/380	3000

Ins	Rating	Dimension in	Approx Weight	Bearings
F	CONT.	inch	95 lbs.	DE: 6306ZZ NDE: 6306ZZ

Totally Enclosed Fan Cooled Squirrel Cage Rotor.

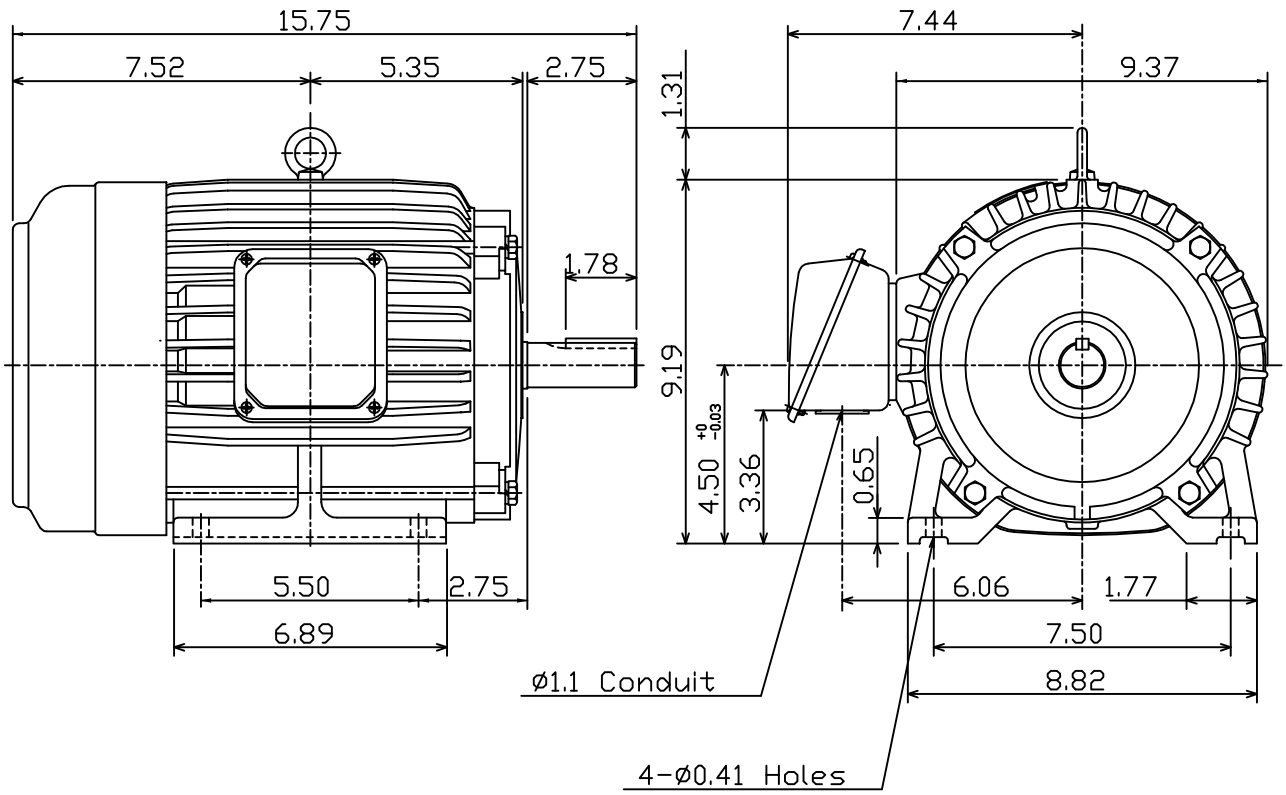

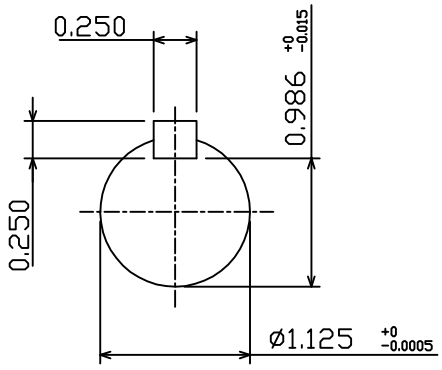

0				

DWN.	J.H.LIANG	05·20·99	TECO Westinghouse	DWG NO.
CHKD.	C.S.LO	05·26·99		31049D190560
APPD.	Y.B.HUANG	05·26·99		