DATE MAY 28, 2009	OUTLINE DIMENSIONS	MOTOR TYPE: ASGH
CATALOG # DTP0102	3-PHASE INDUCTION MOTOR	FRAME NO. 213T

Pole	HP	kW	Hz	VOLT	Syn.Speed r/min(rpm)
2	10	7.5	60	230/460	3600

Ins	Rating	Dimension in	Approx Weight	Bearings
F	CONT.	inches	123 lbs.	DE: 6208ZZC3 NDE: 6206ZZC3

Open Protected Drip-Proof Squirrel Cage Rotor.

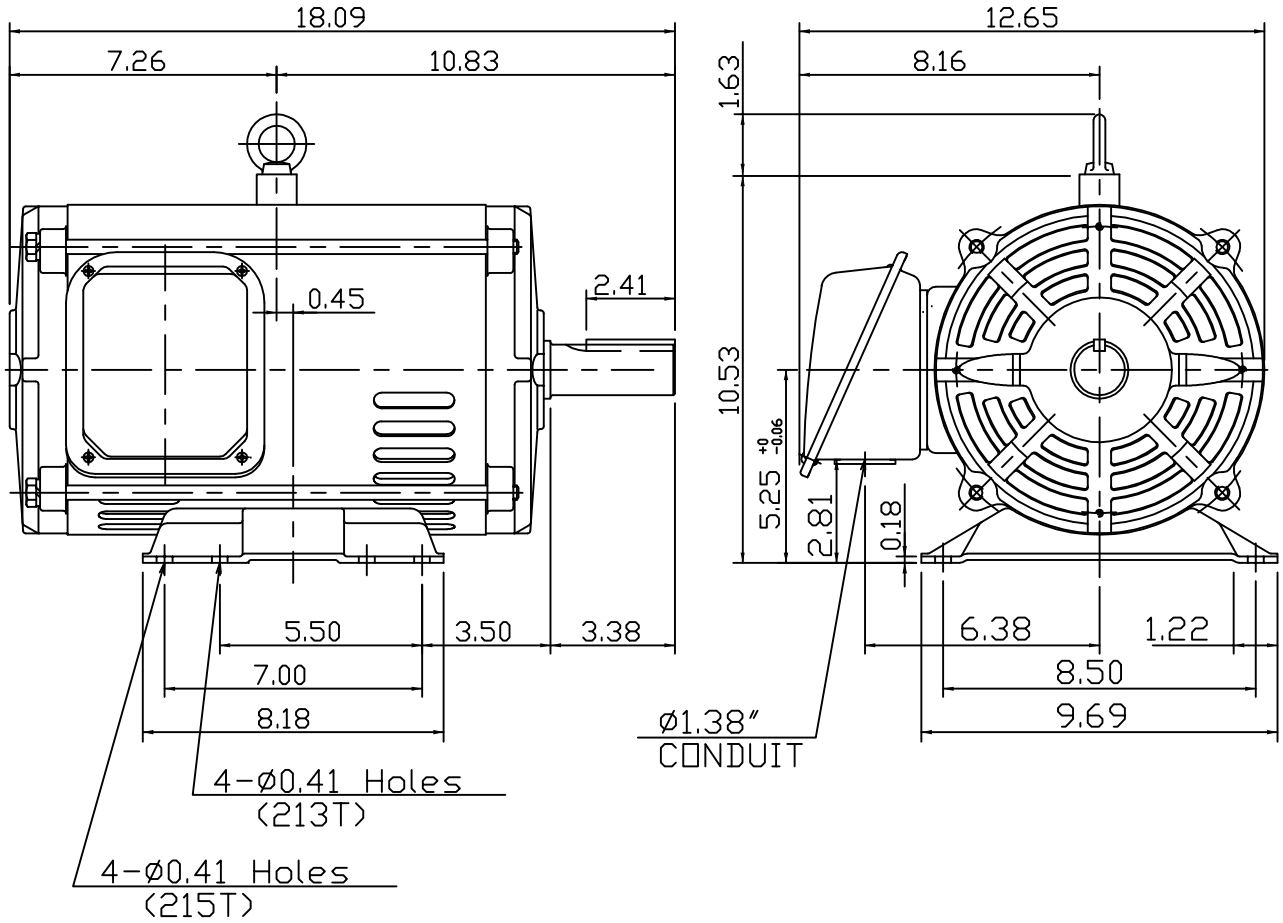

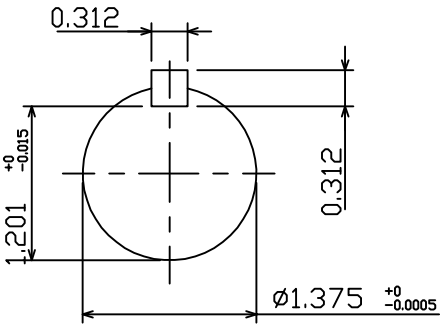

DWN.	J.H.LIANG	04·28·08	TECO Westinghouse	DWG NO.
CHKD.	H.C.YAN	05·05·08		31049R172010
APPD.	M.C.TSAI	05·05·08		